ASSEMBLY INSTRUCTIONS

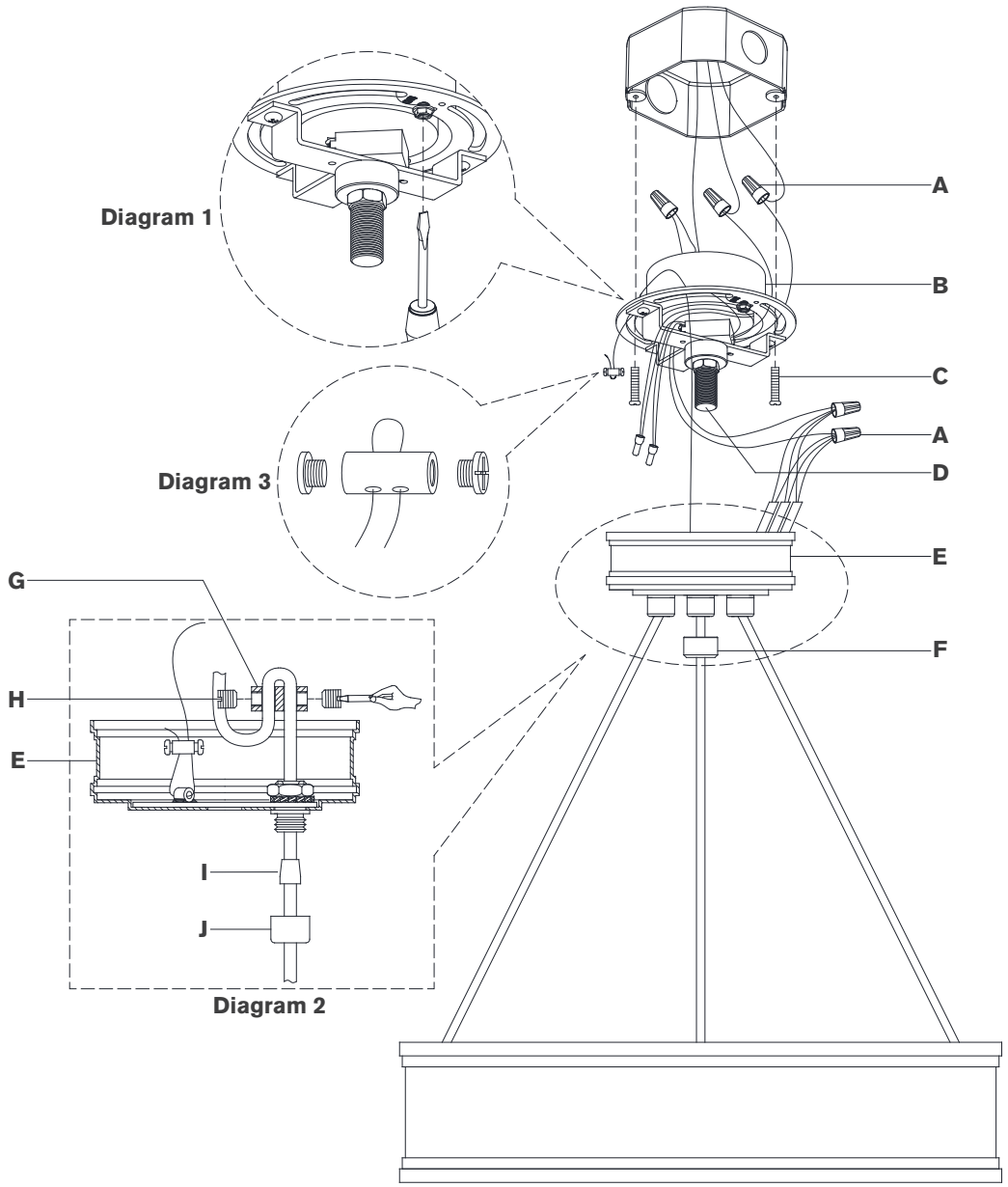

Connery 14" Ring Pendant

Item # CHC 1611

NOTICE:

This light fixture should be installed in accordance with all applicable, local installation codes, and by a person familiar with the construction and operation of it, as well as the hazards involved. Inspect item and contents carefully. If any damage or defect is found, do not install. Retain all packaging material until installation is complete and approved.

TOOLS REQUIRED (NOT INCLUDED):

Phillips Screwdriver	Slotted Screwdriver	Wire Cutters
Wire Strippers	Measuring Tape	

1. Carefully remove all parts from the box. Place on a clean, soft surface.
2. Remove mounting plate **(B)** from canopy **(E)** by removing finial **(F)**.
3. Wrap supply ground wire (usually green or bare copper) around the green grounding screw (see diagram 1). Tighten. Continue supply ground wire connect to filter ground wire (green/yellow) using wire nut **(A)**.
   NOTE: It is imperative that the fixture is grounded.
4. Connect filter input neutral wire (white) to the supply neutral wire (usually white) using wire nut **(A)**.
5. Connect filter input hot wire (black) to the supply hot wire (usually black) using wire nut **(A)**.
   CAUTION: Do not reverse the hot and neutral connections.
6. Make sure all wire connections are tight, then carefully tuck into the junction box.
7. Install mounting plate **(B)** to the junction box and secure with mounting screws **(C)**.
8. To adjust each hanging wire loosen screws **(H)** on either side of the cable lock nut **(G)** and adjust to desired length. Once complete re-secure screws **(H)** and repeat steps with the remaining wires. (see diagram 2)

ASSEMBLY INSTRUCTIONS

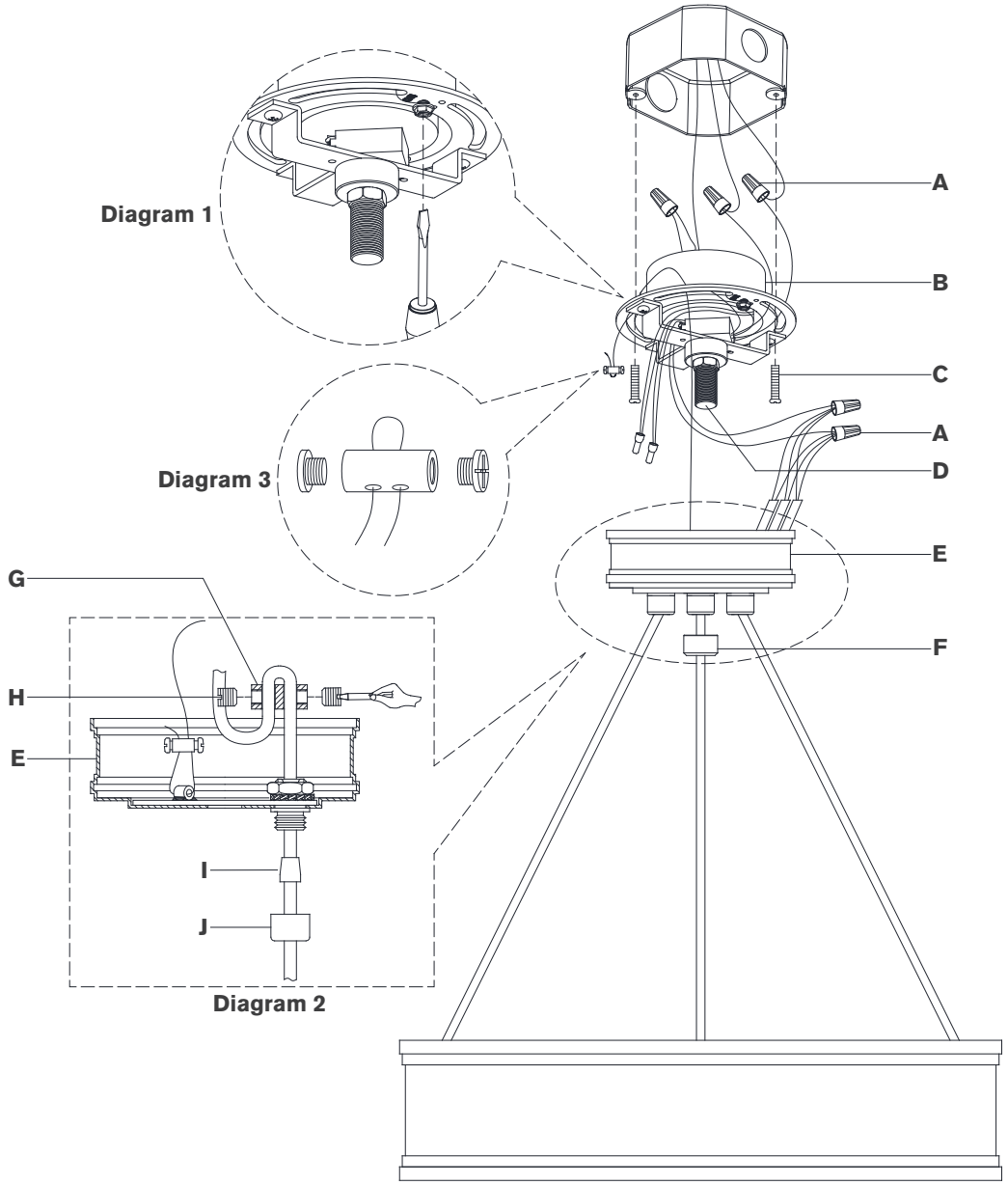

Connery 14" Ring Pendant

Item # CHC 1611

NOTICE:

This light fixture should be installed in accordance with all applicable, local installation codes, and by a person familiar with the construction and operation of it, as well as the hazards involved. Inspect item and contents carefully. If any damage or defect is found, do not install. Retain all packaging material until installation is complete and approved.

9. After fixture height is achieved shorten the wires by using a pair of cutters (not included), leaving enough length to reach mounting plate **(B)**.
   NOTE: Final leveling in later step will only allow for small adjustments. Make sure fixture height and fixture level are accurate before cutting wires.
10. Remove outer housing of wire by making a neat cut all the way around, about 1" from the end. Once cut is made, remove and discard the 1" piece of housing, exposing the electrical wires.
    NOTE: Make sure not to cut too deep into housing or electrical wires could become damaged.
11. Separate wires, and strip insulation on each 5/8".
12. Run hanging cable through hole on back of mounting plate **(B)**. Loosen cable lock and install to end of hanging cable. Insert other end of cable through the cable lock and tighten ends with a screwdriver to secure. (see diagram 3)
13. Connect fixture neutral wire (black) to the driver output wire (black) using wire nut **(A)**.
14. Connect fixture hot wire (red) to the driver output wire (red) using wire nut **(A)**.
    CAUTION: Do not reverse the hot and neutral connections.
15. Install canopy **(E)** to threaded nipple **(D)** and secure with finial **(F)**.
16. To level fixture, unscrew cap nut **(J)**, feed fixture wire through stopper **(I)** and then re-secure cap nut **(J)**. Repeat as needed with other wires. (see diagram 2)

Care Instructions: Clean only with a soft dry cloth or feather duster. Do not use abrasive or chemical agents.